FOR-1754 Rev.1.1

未注公差/General tolerances(mm)														
0 ~ 3	>3 ~ 6	>6 ~ 10	>10 ~ 18	>18 ~ 30	>30 ~ 50	>50 ~ 80	>80 ~ 120	>120 ~ 180	>180 ~ 250	>250 ~ 315	>315 ~ 400	>400 ~ 500	>500	0.1/10
±0.12	±0.18	±0.22	±0.26	±0.31	±0.37	±0.57	±0.80	±0.93	±1.05	±1.15	±1.60	±2.20	±2.50	±2°

Without Cover

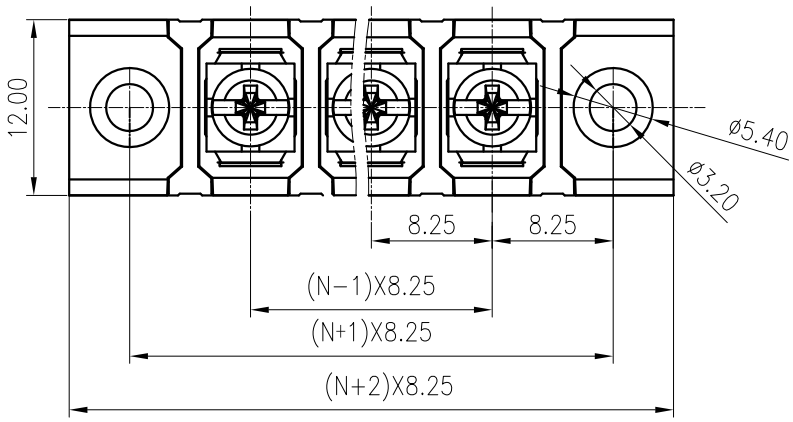

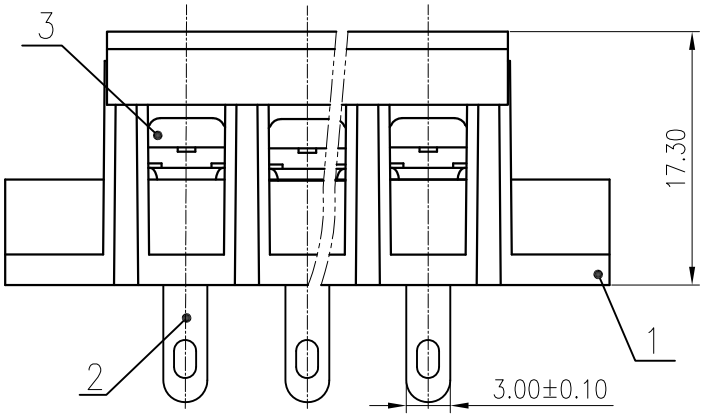

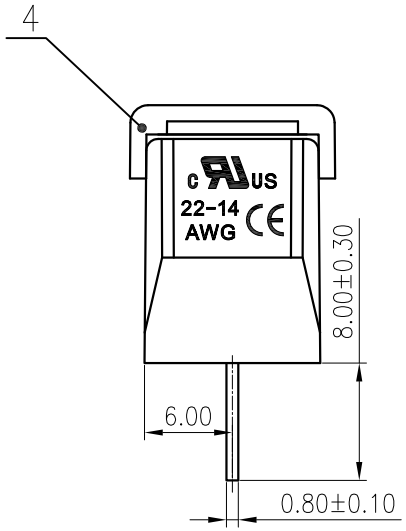

PCB LAYOUT

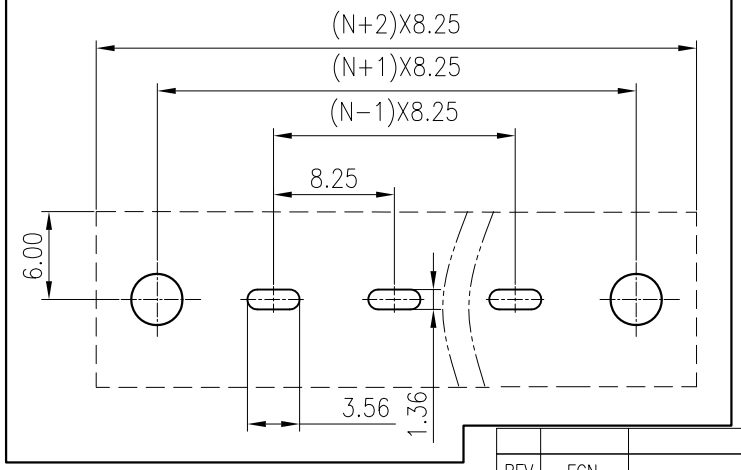

ITEM	NAME OF PART	MATERIAL	NOTES
4	COVER	PC	UL94V-2
3	SCERW	STEEL	Ni PLATED
2	PIN HEADER	COPPER ALLOY	Sn PLATED
1	HOUSING	PA66	UL94V-0

UL 标准/UL Standard:	B	C	D
额定电压/电流/Rated Voltage(V)/Current(A)	300/15	150/15	300/10
EC 标准/IEC Standard:			
过压类别/Overvoltage Category/污染等级/Pollution Degree	III/3	III/2	II/2
额定电压/电流/Rated Voltage(V)/Current(A)	300/24	300/24	600/24
额定脉冲电压(KV)/Rate Impulse Voltage(KV)	5	5	5
螺丝扭矩/Torque Tightening(N·m/Lb.in)	M3, 0.5/4.43		
线径范围/Wire Range(AWG)	22~14AWG		
间距/Pitch(mm)/线数范围/Poles	8.25/N=02~24P		
剥线长度/Stripping length(mm)	8		
使用温度范围/Operating temperature(°C)	-40~+105		
符合RoHS环保要求/Conform to RoHS	Yes		

REV	ECN	DESCRIPTION	DRFT	DATE

MATERIAL: / SURFACE: /

MAT NO.: /

STATUS: /

APPD:

CHKD:

DRFT: ZhangJ 2020.05.26

SIZE: A4 mm (inch)

DEGSON®

宁波高松电子有限公司
NINGBO DEGSON ELECTRICAL CO., LTD

NAME: DG38H-A-XXP-1Y-00A(H)

DRAWING NO.: DG38H-C01 REV T0

TYPE: CUSTOMER DRAWING SCALE: 2:1 SHEET 1/1